MULTIPLE LAYERS METALLIC HARD SEALING BUTTERFLY VALVE
多层次金属硬密封蝶阀

产品结构 Product structure

多层次硬密封蝶阀系列产品，系我公司新开发的长寿命、节能型蝶阀。其结构采用三维偏心原理设计，阀座采用硬软密封兼容的多层次结构，加工精湛，工艺先进。本产品由阀体、蝶板、多层次阀座、阀杆、传动机构等主要部件组成。

This company has produced new product of multiple layers hard sealing butterfly valve with long service life, energy saving. The configuration adopt three-dimension eccentric principle to be designed, seat is use in hard & soft hermetical multiple configuration, exquisite process, advanced technology, and this product is composed of body, disc, seat with multiple layers, stem, operative mechanical etc.

特点 Characteristic

由于本产品蝶阀采用的是三维偏心原理设计，使密封面的空间运动轨迹达到理想化，密封副相互之间无磨擦、运动件无干涉，根据不同工况要求密封材料选择得当，从而使蝶阀的密封性、耐腐蚀性、耐高温性和耐磨性等得到了可靠的保证。其主要特点如下：

1、开启力矩小，灵活方便，省力节能；

2、三维偏心结构，使蝶板越关越紧，其密封性能可靠；

3、根据工况要求耐高压、耐腐蚀、耐磨损、使用寿命长等。

Because this butterfly valve adopt three-dimension eccentric principle to design, makes the movement track on facing space reach to idealization, and there are no attrition and no intervene between hermetical components, furthermore, the hermetical material has been selected reasonably, thereby it ensure hermetic, antisepsis, wearable capability of valve. The main characteristics as below:

1.Tiny moment for starting, flexible and convenient, saving labor and energy.

2.Three-dimensional eccentric configuration forces disc close tighter and tighter, and reach to reliable hermetic capability and with no leakage.

3.It has characteristic of high temperature resistant, high pressure resistant, antisepsis, wearable, long service life etc.

主要技术参数 Main technology parameter

公称通径 Nominal diameter	DN(mm)	50～1600				50～500
公称压力 Nominal pressure	PN(MPa)	0.6	1.0	1.6	2.5	4.0
试验压力Ps(MPa) Test pressure	强度试验 Shell test	0.9	1.5	2.4	3.75	6.0
	密封试验 Seal test	0.66	1.1	1.76	2.75	4.4
渗漏率 Leakage	＜0.1×DNmm²/s(符合accord with GB/T13927-92标准standard)					
适用温度 Appropriate temperature	碳钢Carbon steel：-29℃～350℃ 不锈钢 Stainless steel：-40℃～600℃					
适用介质 Appropriate medium	尘气、空气、水、蒸气、煤气、油品以及酸、碱、盐带有弱腐蚀性介质等 Air,water,steam,coal gas,oil and acid,alkali,salt corrosive medium and so on.					
驱动形式 Drive modality	蜗杆蜗轮传动、气传动、电传动 Worm wheel drive, gas drive, electric drive					

WAFER TYPE MULTIPLE LAYERS METALLIC HARD SEALING BUTTERFLY VALVE

对夹式多层次金属硬密封蝶阀

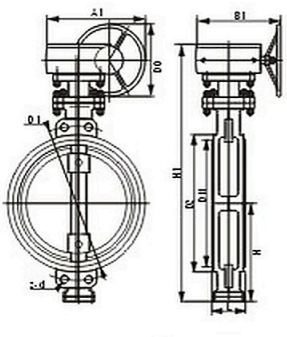

D373 型

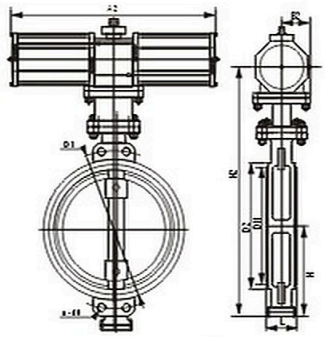

D673 型

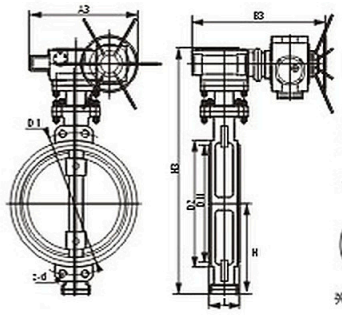

D973 型

$D\frac{3}{6}73H-\frac{6}{10}C.P.R.V$

对夹式多层次金属硬密封蝶阀 Wafer type multiple layers metallic hard sealing butterfly valve

公称通径DN Nominal diameter		结构长度(标准值) Structure length (standard)	H	外形尺寸(参考值)External dimension(consult)									连接尺寸(标准值) Connection dimension(standard)			
				D373H			D673H			D973H			PN0.6MPa		PN1.0MPa	
mm	inch	L		H1	A1	B1	H2	A2	B2	H3	A3	B3	D1	Z-d	D1	Z-d
50	2	43	112	350	180	200	625	245	72	530	250	255	110	4-14	125	4-18
65	$2^1/2$	46	115	370	180	200	625	245	72	530	250	255	130	4-14	145	4-18
80	3	49	120	380	180	200	645	245	72	565	250	255	150	4-18	160	8-18
100	4	56	138	420	180	200	675	355	92	600	250	255	170	4-18	180	8-18
125	5	64	164	460	180	200	715	355	92	640	250	255	200	8-18	210	8-18
150	6	70	175	555	270	280	800	355	92	705	300	315	225	8-18	240	8-22
200	8	71	215	780	400	425	850	250	170	775	300	315	280	8-18	295	8-22
250	10	76	243	840	400	425	925	250	170	945	300	315	335	12-18	350	12-22
300	12	83	285	995	450	560	1035	450	220	1070	300	315	395	12-22	400	12-22
350	14	92	320	1050	450	560	1070	450	220	1140	300	315	445	12-22	460	16-22
400	16	102	350	1220	535	580	1190	450	220	1210	300	315	495	16-22	515	16-26
450	18	114	350	1280	535	580	1250	650	280	1335	575	714	550	16-22	565	20-26
500	20	127	380	1365	535	580	1290	650	280	1415	575	714	600	20-22	620	20-26
600	24	154	435	1460	570	660	1455	850	380	1605	656	810	705	20-26	725	20-30
700	28	165	480	1520	750	550	1585	850	380	1844	656	810	810	24-26	840	24-30
800	32	190	530	1710	750	550	1700	1250	380	2040	656	810	920	24-30	950	24-33
900	36	203	595	1810	750	550	1965	1250	380	2255	785	863	1020	24-30	1050	28-33
1000	40	216	650	1900	900	750	2015	1250	380	2380	785	863	1120	28-30	1160	28-36
1200	48	254	775	2280	1000	925	2250	1250	380	2640	785	863	1340	32-33	1380	32-39
1400	56	279	870	2450	1000	925				2886			1560	36-36	1590	36-42
1600	64	318	1000	2730	1000	925				3156			1760	40-36	1820	40-48
1800	72	356	1110	3020	1100	980				3421			1970	44-39	2020	44-48
2000	80	406	1250	3270	1100	980				3685			2180	48-42	2230	48-48

FLANGE TYPE MULTIPLE LAYERS METALLIC HARD SEALING BUTTERFLY VALVE

法兰式多层次金属硬密封蝶阀

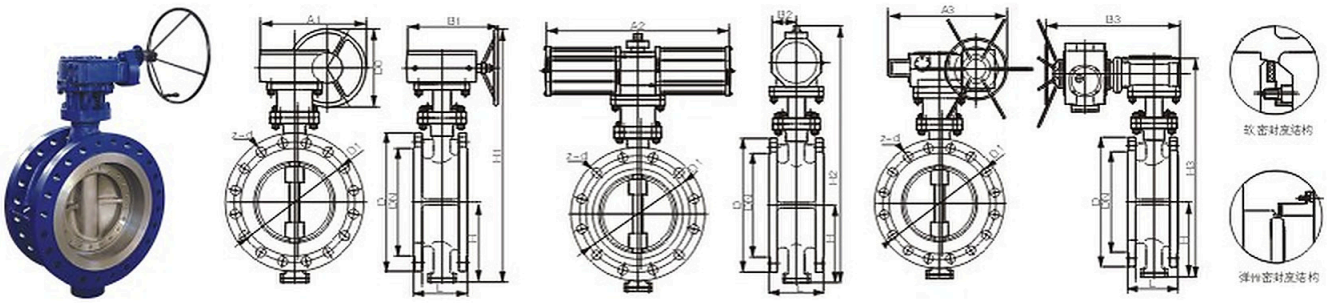

D343型　　D643型　　D943型

D643H-$\frac{0.5}{2.5}$/$\frac{3}{6}$/$\frac{9}{10}$C.P.R.V

法兰式多层次金属硬密封蝶阀 Flange type multiple layers metallic hard sealing butterfly valve

公称通径DN Nominal diameter		结构长度(标准值) Structure length (standard) L		H	外形尺寸(参考值) External dimension (consult)									连接尺寸(标准值) Connection dimension (standard)					
					D343H			D643H			D943H			PN0.6MPa			PN1.0MPa		
mm	inch	短Brief	长Long		H1	A1	B1	H2	A2	B2	H3	A3	B3	D	D1	Z-d	D	D1	Z-d
50	2	108	150	112	350	180	200	625	245	72	530	250	255	140	110	4-14	165	125	4-18
65	2 1/2	112	170	115	370	180	200	625	245	72	530	250	255	160	130	4-14	185	145	4-18
80	3	114	180	120	380	180	200	645	245	72	565	250	255	190	150	4-18	200	160	8-18
100	4	127	190	138	420	180	200	675	355	92	600	250	255	210	170	4-18	220	180	8-18
125	5	140	200	164	460	180	200	715	355	92	640	250	255	240	200	8-18	250	210	8-18
150	6	140	210	175	555	270	280	800	355	92	705	300	315	265	225	8-18	285	240	8-22
200	8	152	230	200	760	400	425	850	250	170	775	300	315	320	280	8-18	340	295	8-22
250	10	165	250	243	830	400	425	925	250	170	945	300	315	375	335	12-18	395	350	12-22
300	12	178	270	250	895	450	560	1035	450	220	1070	300	315	440	395	12-22	445	400	12-22
350	14	190	290	280	950	450	560	1070	450	220	1140	300	315	490	445	12-22	505	460	16-22
400	16	216	310	305	1190	535	580	1190	450	220	1210	300	315	540	495	16-22	565	515	16-26
450	18	222	330	350	1255	535	580	1250	650	280	1335	575	714	595	550	16-22	615	565	20-26
500	20	229	350	380	1305	535	580	1290	650	280	1415	575	714	645	600	20-22	670	620	20-26
600	24	267	390	445	1340	570	660	1455	850	380	1605	656	810	755	705	20-26	780	725	20-30
700	28	292	430	480	1520	750	550	1585	850	380	1844	656	810	860	810	24-26	895	840	24-30
800	32	318	470	530	1710	750	550	1700	1250	380	2040	656	810	975	920	24-30	1015	950	24-33
900	36	330	510	580	1810	750	550	1965	1250	380	2255	785	863	1075	1020	24-30	1115	1050	28-33
1000	40	410	550	650	1960	900	750	2015	1250	380	2380	785	863	1175	1120	28-30	1230	1160	28-36
1200	48	470	630	760	2250	1000	925	2250	1250	380	2640	785	863	1405	1340	32-33	1455	1380	32-39
1400	56	530	710	850	2435	1000	925				2886			1630	1560	36-36	1675	1590	36-42
1600	64	600	790	1030	2780	1000	925				3156			1830	1760	40-36	1915	1820	40-48
1800	72	670	870	1230	3020	1100	980				3421			2045	1970	44-39	2115	2020	44-48
2000	80	760	950	1350	3270	1100	980				3685			2265	2180	48-42	2325	2230	48-48